Submitted to Marine Technology Society Journal for Publication

Development of a Dedicated ROV for Ocean Science

James B. Newman and Bruce H. Robison

Monterey Bay Aquarium Research Institute
160 Central Avenue Pacific Grove, CA 93950

ABSTRACT

The Monterey Bay Aquarium Research Institute (MBARI) is developing a 4000 meter Remotely Operated Vehicle (ROV) that will be dedicated to scientific investigations in the deep ocean. The system's design goals reflect this mission, providing a highly controllable platform which will introduce minimal disturbances into the environment, provide efficient, reliable sampling and data collection capabilities, and offer flexible support for mission-specific equipment packages.

A prototype version of the vehicle is now under construction, and the completed system will go into service in 1994. This paper describes the objectives the project addresses and the technical solutions that have been adopted to date.

INTRODUCTION

A fundamental objective of MBARI (the Monterey Bay Aquarium Research Institute) is to bring modern technology to bear upon significant areas of oceanographic research. Toward this end we have focused our efforts as engineers and scientists on a variety of issues, including chemical instrumentation, buoy systems, scientific database systems, and remotely operated vehicles and their related technology. With a large submarine canyon on our doorstep and the obvious need for the technological advancement of scientific Remotely Operated Vehicles (ROVs), a deep diving research vehicle is a natural choice for development at MBARI.

MBARI is developing a new generation ROV designed from the start as a scientific tool. This project specifically addresses many of the concerns of manned submersible users. The subject of this paper is the MBARI contribution to this new field of science ROVs, with a focus on the scientific justifications for its development and design.

STATE OF THE ART IN DEEP SCIENCE ROVS

Underwater vehicles are essential elements in modern oceanographic research. Manned deep submersibles, which have dominated the field in the last two decades, are being joined by ROVs. Most of these ROVs are based on oilfield systems, adapted to scientific missions. Such systems are often criticized by the users of manned submersibles as awkward, noisy, destructive of the site under study, and inadequate in their data gathering and payload capabilities. A few ROV systems are presently performing deep ocean science missions for the oceanographic community. Most of these, like MBARI's first ROV, VENTANA (Etchemendy, and Davis, 1991), are based on adaptations of oilfield ROVs. Examples include the Canadian Institute of

Ocean Sciences' 5000 meter HYSUB, which will be used in geological studies on the Juan de Fuca Ridge in 1992. Harbor Branch Oceanographic Institution operated another HYSUB for several years, but has given it up in favor of the Institution's manned submersibles. The Hawaii Undersea Research Laboratory at the University of Hawaii is in the process of adapting an older vehicle, a Hydro Products RCV 150, to deep operation in support of oceanographic research, as well as for emergency recovery of the Laboratory's PISCES V manned submersible.

MBARI's VENTANA vehicle has been successfully conducting scientific investigations in and near the Monterey Submarine Canyon since 1988, operating on a daily basis from Moss Landing, California. VENTANA, as noted above, is an adapted oilfield HYSUB ROV, built by International Submarine Engineering of British Columbia, with upgraded cameras, sensors, sampling gear, and telemetry. VENTANA preserves most of the reliability and ruggedness typical of hydraulic ROVs, but lacks the quiet operation and flexibility that advanced manned systems offer, and the fine control capabilities of more advanced ROVs, particularly those with electric thrusters.

The only deep ROV in the United States designed from the beginning to support oceanographic science missions is the Woods Hole Oceanographic Institution's JASON vehicle (Yoerger et al., 1988). This 6000 meter system has completed science missions that include surveying a deep dump site, and geological surveys at hydrothermal vent sites on the Juan de Fuca Ridge. JASON uses electric motors for its thrusters, pan/tilt and manipulator, thus avoiding the need for a noisy and less efficient hydraulic power system, and providing more precise control capabilities. Many of the concepts applied to JASON have been adopted for the new MBARI ROV.

The Japan Marine Science and Technology Center (JAMSTEC) is developing a family of "DOLPHIN" ROVs for scientific missions and for recovery of the SHINKAI manned submersibles. These vehicles are hydraulically powered and are similar to oilfield ROVs, except in their depth capabilities and their use of fiber optics for data transmission (Hattori 1989). DOLPHIN 3K, a 3000 meter ROV, has been used for geological and biological research operations. A 10,000 meter ROV, DOLPHIN-10K, is now being developed.

The Institut Francais de Recherche pour l'Exploitation de la Mer (IFREMER), long a developer and user of manned systems for deep exploration, is now developing a 6000 meter ROV for scientific missions. This system is in the early stages of system definition.

ADVANTAGES AND LIMITATIONS OF MANNED SUBMERSIBLES

Manned submersibles have significant advantages over existing ROVs. The deep submersible ALVIN has been operating for more than 25 years, and has an impressive record of accomplishments to its credit. The U.S. Navy's SEA CLIFF and TURTLE, the DEEP ROVER, the Johnson SEA-LINK vehicles, the 2000 meter PISCES vehicles, and the JAMSTEC and IFREMER manned submersibles have all created an expectation that deep sea scientists will physically travel to the sites being studied.

By putting "man in the sea", these systems provide several advantages: visual observations are intuitive, because naturally occurring spatial relationships are preserved and binocular vision is largely unaffected. Inertial cues to the observer are consistent with vehicle motion. Manned vehicles are usually relatively quiet, they avoid the constraints of tethers, and they can carry larger payloads and exert greater manipulator forces than most ROVs can handle. Visually-cued manipulation tasks may be carried out more easily from manned submersibles, thanks to direct binocular vision. Scientists using these systems are provided with stimuli that can only be achieved via human presence at the research site.

The most serious limitations of the manned submersibles are limited bottom time, and the potential for exposure of personnel to hazardous situations. In addition, these systems often require large support vessels. The absence of high-speed data links limits the opportunity for involvement of shipboard personnel in the scientific work as it is being performed. This means that whatever data collection is attempted must be self-contained on the submersible. The computerized control and navigation systems that are an integral part of many ROV systems offer the potential to dramatically improve positioning, manipulation and survey accuracy. Manned submersibles are generally not computer controlled, and often lack the precise thrust control, positioning and maneuvering capabilities of the more nimble ROVs.

MBARI's new ROV will attempt to provide many of the advantages of manned submersibles while capitalizing on the long duration dives, reduced size and weight and data gathering capabilities that only tethered ROVs can offer.

MISSION REQUIREMENTS

The mission requirements for the new ROV have driven most of the design decisions and the overall configuration of the system. It is inevitable that we cannot anticipate the full range of tasks that will be performed during the life of the vehicle. Instead, the ROV is designed to address broad classes of missions, with built-in flexibility.

MBARI's deep ROV research is expected to focus on geochemical processes, physics, geology and biology. Planned missions for the ROV include:

- Instrument placement, retrieval and support
- In situ experimentation (e.g. tracer injection and analysis)
- Ecological studies and observations (midwater and benthic)
- Sampling and light coring
- Surveys of environmental parameters

These missions will require the vehicle to conduct the following functions:

- Transecting -- for quantification of animals, or other target types, substrates or zonal patterns.
- Hovering -- to observe features, with minimum thruster disturbance.
- Following -- following moving targets, along specific environmental features, or along a pre-set grid.
- Return -- repeatedly to designated sites.
- Collection -- object retrieval and transport to the surface.
- Manipulative functions -- a broad range of interactive tasks.

On all of its missions, the ROV will perform as the front end of a data management system that supports general scientific use (Gritton and Baxter, 1992). Data from the core sensors on the ROV will be made available to all of MBARI's scientific researchers.

A detachable "toolsled" module is required as a user-defined package configured for specific missions. This module will be quickly detachable, minimizing the time required for reconfiguration between dives and allowing considerable latitude to the scientific users. Sufficient power must be available for equipment in the various toolsled configurations.

The need to make observations of marine organisms imposes the requirement that acoustic noise, light emissions and water disturbances be minimized. MBARI's emphasis on video as a primary source of quantitative information leads to an emphasis on high-quality video, good lighting, and on high accuracy pan and tilt mechanisms to aim the cameras. Pan and tilts for the lights will probably also be required, to provide adequate lighting over the full range of the camera motion and imaging requirements.

Precision surveys using video, sonar, or other sensors may be in support of ecological or geological studies, physical oceanography or the examination of anthropogenic effects on the sea floor. Support of deployed instrumentation or experimental equipment will be a principal requirement of the system. Sampling gear and manipulators are principal tools in much of the interactive work that will be pursued. Development and integration of improved sampling gear will be pursued during the vehicle's development and throughout its working life.

GOALS OF THE NEW ROV DEVELOPMENT

The primary goal of the project is to develop the best possible mobile science platform to support MBARI research in the deep ocean. The project expects to demonstrate that, in addition to being safer and less expensive than manned submersibles, an ROV can be more effective than manned systems for a variety of tasks.

MBARI is building the new ROV internally to maximize the involvement of MBARI scientists and engineers in the development and on-going support of the system, and to emphasize the unique features needed to support oceanographic science. A commercially built system would be less expensive, but could not as completely reflect and support the unique requirements of the scientific users. In addition, building the system internally fosters an interactive relationship, within a single organization, between the engineering team that builds the system, the scientists who use it, and the operations team that maintains and operates it.

The design must minimize acoustic emissions and disturbance of the water around the vehicle, to minimize impact on the environment and avoid interference with acoustic devices. Fish are believed to be insensitive to noise above approximately 7500 Hz (Bone and Marshall, 1982), and to have peak sensitivity to acoustic noise at approximately 1500 Hz. The system will be designed to specifically minimize acoustic emissions in this frequency range.

The system must offer a high degree of controllability for precision measurements and operator friendliness. Precision survey and manipulation demand high accuracy in navigation and positioning. Computer systems must not only control the vehicle precisely, but they provide the flexibility and expandability to support the advanced control system architectures that are being developed at MBARI and elsewhere.

Providing high digital data rates and high fidelity in that data is another primary requirement. The quality of the video signals must be preserved as they are transmitted to the surface and recorded.

For the new ROV to be a success it must be reliable, maintainable in a practical manner, safe to operate, and reasonably easy for the operator to control.

A secondary goal of the project is to share its developments with other organizations in the community. Documentation and reproducibility are therefore particularly important.

DEPTH REQUIREMENT AND SPECIFICATIONS

Monterey Canyon and its several branches make up MBARI's primary research site and the Canyon's maximum depth figures heavily in the selection of the new ROV's depth capability of 4000 meters. The Monterey Canyon is an enormous underwater geological feature, extending 60 miles offshore from its head at Moss Landing, California, and reaching depths of almost 4000 meters before opening out into the abyssal plain. Beyond this local area, the ROV's depth capability provides access to approximately half of the world's seafloor, and most of the midwater volume of the oceans. Table 1 lists the ROV system specifications.

SWATH SHIP

MBARI is in the process of acquiring a new research vessel that is as remarkable as the new ROV. A Small Waterplane Area Twin Hull (SWATH) vessel is configured somewhat like a catamaran, but the hulls are formed of roughly cylindrical lower sections containing most of the submerged volume, and slender struts that connect the lower hull to the main deck and superstructure. The struts create a much smaller waterplane than conventional monohull or multihull ships of similar displacement. This reduced waterplane area makes the SWATH much less sensitive to wave action than most other designs.

The SWATH vessel for MBARI will have a length of 35 meters (114'), a beam of 16 meters (53'), and a displacement of approximately 400 tons (Figure 1). An enclosed moonpool on the main deck will allow launching and recovery of the ROV near the centers of pitch and roll. MBARI has contracted design and construction of the vessel with Swath Ocean Systems, of Chula Vista, CA.

[redacted]

SYSTEM ARCHITECTURE

Mechanical Layout

The mechanical layout of the new MBARI ROV is similar to conventional work vehicles used in the offshore industry, with an open tubular frame supporting most on-board equipment and a syntactic foam flotation package for buoyancy (Figure 2). This layout favors vehicle stability and accessibility of components over hydrodynamic efficiency. Overall length of the ROV will be approximately 2.75 meters (9 feet), and air weight approximately 1800 kg (4000 lbs).

Thrusters

Two vertical thrusters, two lateral thrusters and two fore-and-aft thrusters provide control in four directions of motion, with good crabbing (lateral motion) ability and some redundancy. All four directions of motion are supported even with any single thruster disabled, and parallel power and data wiring to two banks of three thrusters guarantees that heading, depth and one horizontal direction can be controlled even if the power or data line connection to half the thrusters is interrupted.

The ROV's six thrusters use 3.73 kw (5 hp) brushless DC motors with integral, pressure-tolerant control electronics. The motors and controllers are built by Moog, Inc. and are similar to the 2.24 kw (3 hp) thrusters and controllers on the submersible ALVIN. MBARI has developed a microcontroller that will mount within each Moog controller to provide a digital interface to the central vehicle computer and to support calibration and thruster control algorithms.

Propellers and ducts are Innerspace 1002 five-bladed units, which, according to the manufacturer, generate a bollard thrust of approximately 1245 N (280 lbf) at 1630 RPM and 3.73 kw (5 hp). The Innerspace units were selected primarily for their off-the-shelf availability and modest outside diameter. Characterization of these units with the Moog motors, including step responses, change in thrust with advance velocity, bollard pull and efficiency data will be performed before the complete thrusters are used on the ROV.

Toolsled

The most important contributor to scientific flexibility in the system is the lower portion of the frame, consisting of a removable toolsled module that can be configured for a specific mission or class of missions. Toolsleds will use a standard mechanical and electrical interface to the core vehicle, allowing quick exchange of toolsleds. Toolsleds will weigh 1113 N (250 lb) in water, allowing for a wide variety of instruments, samplers, or other equipment. In emergencies the toolsled package can be jettisoned remotely to increase buoyancy. In some missions, the toolsled may be offloaded on, and subsequently recovered from the seafloor, as a self-contained long-term experimental station. A set of standard toolsleds will be available to scientific users, or the user can develop his or her own toolsled package. Discussions are ongoing with IFREMER regarding compatability between toolsleds for the MBARI and IFREMER vehicles.

Cable Configuration

The main umbilical for the system will be a steel armored electro-optic cable with a diameter of 0.680 inches (17.27 mm). This cable will be terminated at a small depressor, and a neutrally buoyant cable up to 150 meters long will tether the depressor to the ROV. Motions of the main umbilical will be decoupled from the ROV by the neutral cable, which will normally be at low or zero tension. This will minimize disturbances caused by ship motions or water drag forces, transmitted through the tether to the ROV.

Analysis of the dynamic behavior of the steel umbilical in heave has shown that defined working loads will not be exceeded under normal conditions with the expected SWATH vessel dynamics. In extreme conditions, with the umbilical fully deployed and in Sea State 6, (4-6 meter waves) the simulations predict snap loading. (M. Triantafyllou and M. Grossenbaugh, unpublished data). These conditions must be avoided, and snap loading prevented, by a heave compensation system.

The cables will use three copper conductors delivering power to the ROV, and three single-mode optical fibers carrying video and digital data.

The depressor at the junction between the steel and neutral cables will initially be a dual termination, with a 150 kg weight attached. A navigation transponder will be attached near the depressor, but will not intrude on power or data paths through the cables.

Electric Power System

Electric power will be delivered to the ROV as high-voltage 400 Hz three phase AC, at 17 KVA, which will provide 15kw at the vehicle. A transformer and rectifier will provide nominal 240 VDC power used by the high power subsystems on the ROV and to supply DC-DC converters for lower voltages needed by other subsystems. Hybrid switches with solid state and mechanical elements will switch high current devices.

Because the subsea transformer must always be operating, it has the potential to be the most troublesome acoustic noise source on the vehicle. The transformer will therefore be designed to minimize acoustic emissions. This may require the use of an air-filled pressure housing and mechanical vibration isolation for the transformer.

Electronics

The ROV's electronics have been designed to provide complete electrical isolation and ground fault detection for each device aboard the vehicle. This makes the system safer to operate and problems easier to diagnose. Figure 3 shows the electrical layout of the vehicle. All data paths between housings are serial digital connections to provide high fidelity, simplify isolation, and minimize the number of electrical inter-connections.

Computers

The central computer on the ROV will be a 6-U (double size) VME bus system with a 68030 microprocessor and a multi-channel serial controller to communicate with the ROV's peripherals. Communication with the surface controller will use a synchronous serial link at 1.44 mbps and Serial Line Internet Protocol (SLIP) to support standard Internet network protocols. The surface controller will use another VME computer, connected by ethernet to a Hewlett-Packard unix workstation that will act as the system's disk server and graphical display platform.

The VME computers will run a real-time operating system, VxWorks (Wind River Systems), providing multi-tasking with high speed context switching, in addition to standard networking and file system capabilities. MBARI is developing a family of peripheral controllers based on the Intel 80C196 microcontroller. Most of the peripheral controllers on the new ROV will be based on the Instrument Bus, providing a bus-based computer that fits efficiently into a six inch diameter housing (Mellinger et al., 1986). These systems will provide specialized features including isolated RS485 serial communications, power switching, water alarms, humidity sensors and local ground fault detection, in addition to sensor and actuator interfaces.

Software

For a computer-controlled system such as the new ROV the system will only work as well as its software, and much of the flexibility of the system will be in its software implementations. ROV control is an active area of engineering research at MBARI and elsewhere. For these reasons and others, a major effort is going into the creation of a flexible software environment that will support a variety of control schemes. These will be maintainable and readily understood by operators and technicians.

At the heart of the system is the VxWorks operating system, and a MBARI enhancement, the Data Manager. This combination provides a distributed, multi-processor real-time control environment with flexible allocation of processors. An arbitrary control architecture can be placed on top of this low-level environment without being constrained by the distributed nature of the hardware.

Graphic displays will be based on the industry standard X-Windows, with all vehicle functions accessible through the graphical user interface. Controls that are manipulated by the pilot on-line will use hardware switches, potentiometers and joysticks.

The software and hardware environment is similar to that in general use at Stanford University's Aerospace Robotics Laboratory, with which MBARI is conducting cooperative research efforts in vehicle and manipulator control. This similarity of platforms simplifies the migration of software from experimental platforms to the operational ROV.

Cameras

The primary camera on MBARI's present ROV, VENTANA, is a high resolution Sony DXC-3000, 3-chip color video camera mated to a Fujinon 5.5-44 mm zoom lens, and mounted on a pan/tilt unit. Wide angle zoom capability is vital to many of the observations made with VENTANA. A similar capability will be provided on the new ROV, using a smaller, new generation 3-chip camera, and a comparable zoom lens. Two pan and tilt units are planned, mounted at opposite corners to support viewing to the side and dual views of a single object from different angles. Each pan and tilt will be capable of supporting reletively large color cameras.

A variety of additional cameras will be provided, including a low-light unit on pan/tilt and multiple fixed cameras providing peripheral and sampler viewing.

Control Capabilities

Control of ROVs is a fast-moving area of research, and the new MBARI ROV is designed to take advantage of new techniques as they emerge. The extensive computing power and the array of sensors on the ROV will support a variety of control schemes ranging from manual control to fully automated modes, but emphasizing supervisory control with human operators overseeing closed loop servos. The project is planning for upgrades to support control of vehicle position based on video inputs, which will allow the vehicle to hold position relative to a fixed object or to follow an object through the water, using only video as input.

Manipulation

A specification for the primary manipulator has been forwarded to several manufacturers for bids. This relatively precise, lightweight manipulator will be permanently fitted to the core vehicle. Mission-specific toolsleds may include provision for a more powerful manipulator for benthic work, capable of operating in conjunction with the primary manipulator.

Other Subsystems

The suite of sensors on the vehicle is more extensive than that of most ROVs. In addition to the normal array of heading, depth, and attitude sensors, a set of core science sensors are included to provide some of the most common measurements that oceanographers monitor. These sensors will measure conductivity, temperature, pressure, oxygen, and light transmission (particle density). Including these sensors on the core vehicle ensures that these minimum data will be available on every dive without requiring duplicate sensors on each toolsled. The core science sensors will be maintained as part of the ROV system.

The ROV will be fitted with a scanning sonar to extend the users' view beyond visual range, and with an acoustic doppler velocimeter to provide relative water motion and velocity relative to the bottom. Both ultra-short baseline and long baseline acoustic navigation systems will be available for ROV positioning, in conjunction with GPS navigation on the support ship.

A variable buoyancy (VB) system will allow the pilot to actively control vehicle buoyancy. The system uses two titanium spheres that can be partially flooded with sea water to achieve the desired weight. A high pressure seawater pump evacuates the spheres.

An emergency system provides a set of emergency functions for use if the power or data communication systems are interrupted. Powered by a battery and commanded acoustically, the system will be capable of flooding the VB system, jettisoning the toolsled and reporting vehicle depth even if the cable has broken.

Conclusion

MBARI is encouraging its engineers and scientists to cooperate closely in the creation of the new ROV, which we hope will produce a more effective scientific tool than if the engineers were merely working to a set of specifications. The new vehicle, deployed from MBARI's new SWATH vessel, will establish a unique capability for conducting targeted scientific investigation in the deep ocean. We are confident that the application of this new technology in our investigations of the deep sea will lead to significant scientific advances.

Depth capability	4000 meters (13,123 feet)
Safety factor (over-pressure survival)	25% (5000 meters)
Forward speed	
no tether drag	1.5 knots (0.77 meters/sec)
Full system deployed transit at	0.75 knots (.39 meters/sec)
normal operation in local current of	0.75 knots
Lateral speed	
no tether drag	0.8 knots (.41 meters/sec)
Vertical speed	
neutrally buoyant	1.0 knots (100 feet/minute)
Payload	
Max Toolsled weight	750 lbs
Max Toolsled weight in seawater	250 lbs
Variable buoyancy capability	150 lbs
change buoyancy at	5 lbs/minute
POWER	
Thruster motors	6 @ 3.7KW (5 HP) each; 75% efficient (minimum)
continuous power through the tether	15KW MAX
distribution	240 VDC nominal
TOOLSLED INTERFACES	
Power	20 Amps @250 volts (5 KW)
Communications	RS485 serial bus, RS232c, Ethernet (802.3)
Mechanical interface	quick-release

Table 1

REFERENCES

Bone, Q. and Marshall, N.B. 1982. *Biology of Fishes*. New York: Chapman and Hall. 253 pp.

Etchemendy, S. and Davis, D. 1991. Designing an ROV for Oceanographic Research. *Sea Technology*. 32(2):21-24.

Gritton, B. and Baxter, C. 1992. Video Database Systems in the Marine Sciences. *Journal of the Marine Technology Society,* this volume.

Hattori, M. 1989. Scientific Application of Deep ROV DOLPHIN-3K. In: *Oceans '89 Proceedings*, Oceans '89 Conference, pp. 771-776. Seattle: IEEE.

Hover F.S., Grosenbaugh, M.A. and Triantafyllou, M.S. 1990. Modelling the dynamics of a deeply-dowed underwater vehicle system. In: *Proceedings First European Offshore Mechanics Symposium*, First European Offshore Mechanics Symposium, pp 457-463. Trondeim, Norway.

Mellinger, E.C., Prada, K.C., Koehler, R.L. and Doherty, K.W. 1986. Instrument Bus: An Electronic System Architecture for Ocean Instrumentation. WHOI Technical Report 86-30. Woods Hole Oceanographic Institution.

Yoerger, D.R., von Alt, C., Newman, J.B., Bowen A., Hersey, W.J., Bowen, M., Delonga, D., Schempf, H., Elder, R. 1988. "Design and Control of the JASON Vehicles". In: *Intervention '88 Proceedings*, ROV '88 Conference, pp. 541-553 Bergen, Norway: Det Norske Veritas.

Figures:

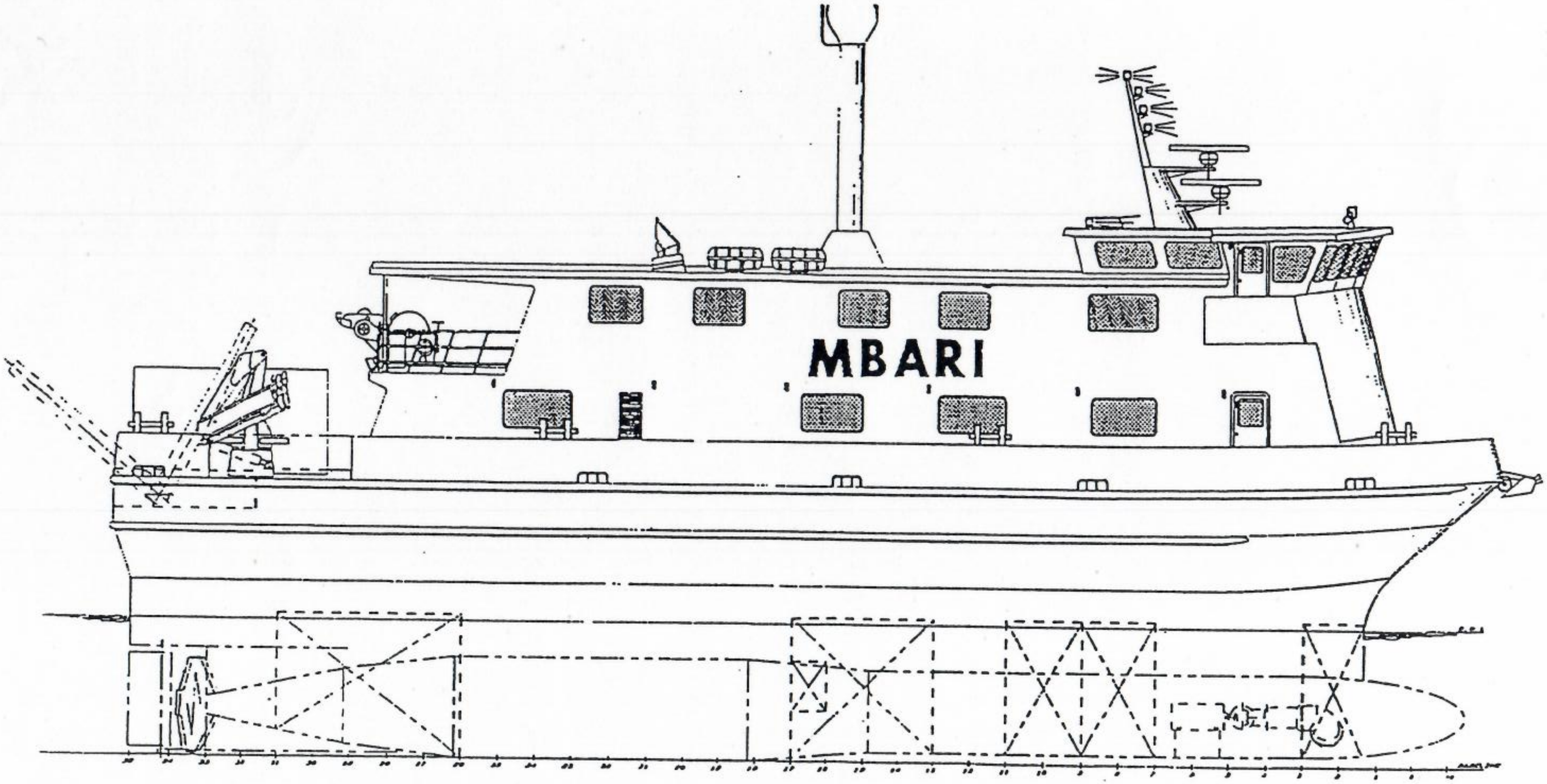

Figure 1

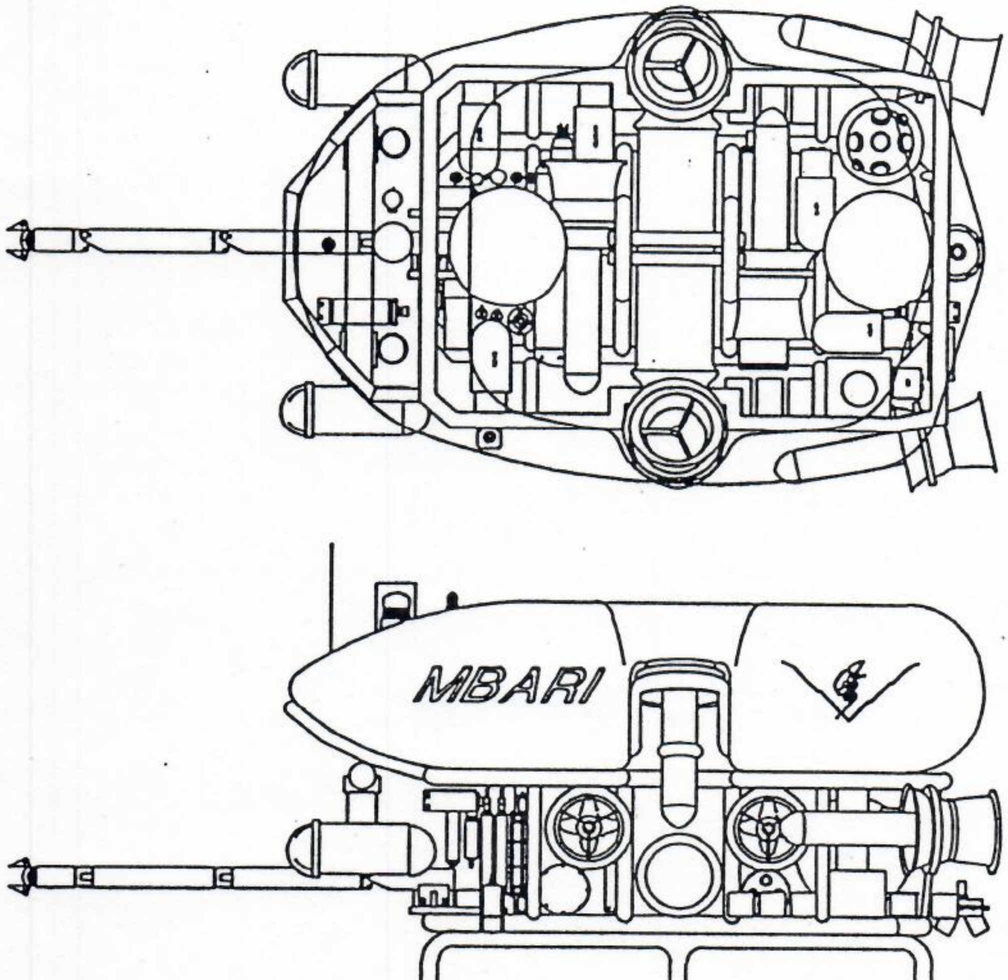

Figure 2

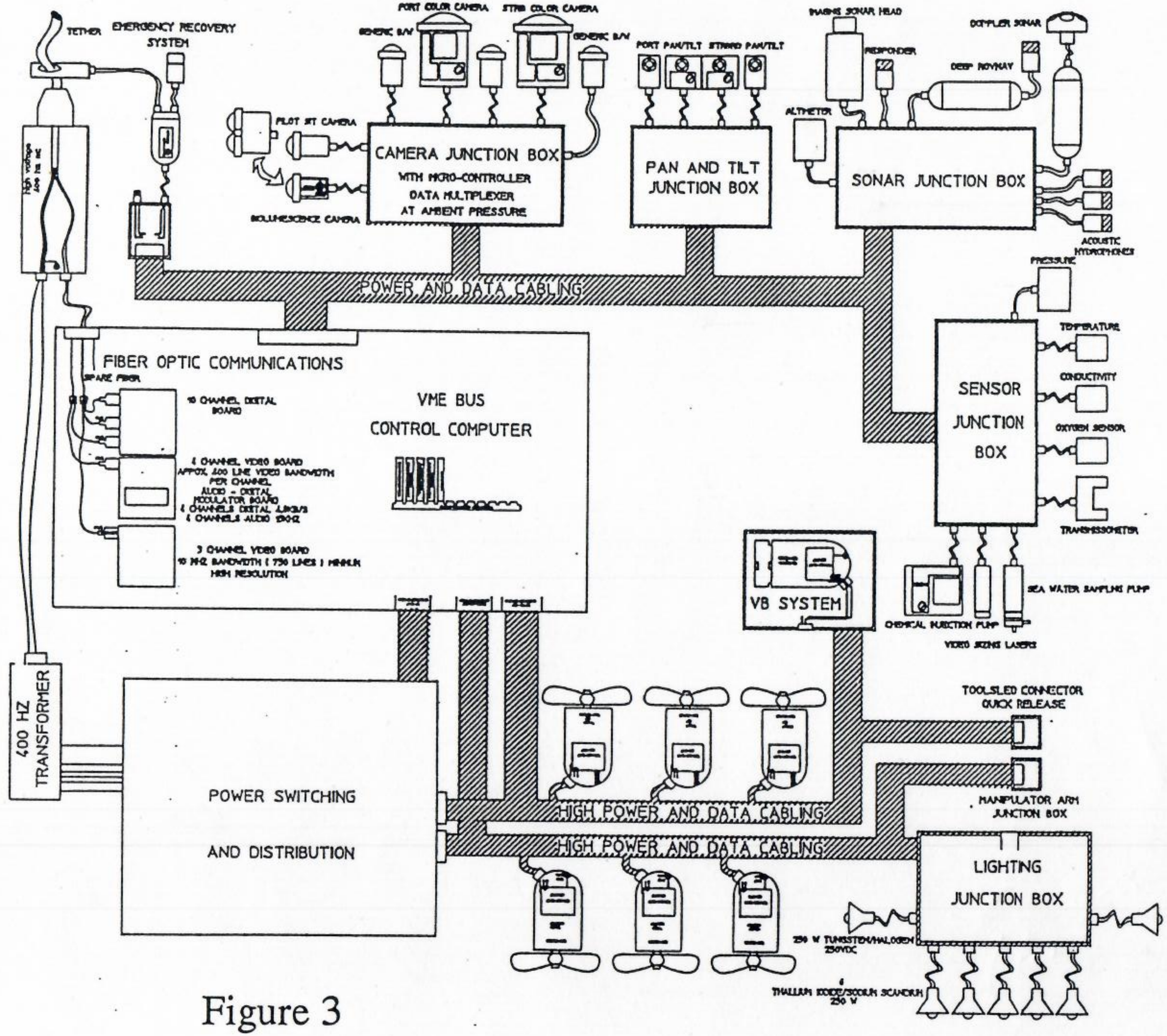
TETHER
EMERGENCY RECOVERY SYSTEM
High voltage 400 Hz AC
PORT COLOR CAMERA
STBD COLOR CAMERA
GENERIC B/W
GENERIC B/W
PILOT SIT CAMERA
BIOLUMINESCENCE CAMERA
CAMERA JUNCTION BOX
WITH MICRO-CONTROLLER
DATA MULTIPLEXER
AT AMBIENT PRESSURE
PORT PAN/TILT
STBRD PAN/TILT
PAN AND TILT
JUNCTION BOX
IMAGING SONAR HEAD
RESPONDER
DEEP ROVNAV
DOPPLER SONAR
ALTIMETER
SONAR JUNCTION BOX
ACOUSTIC HYDROPHONES
PRESSURE
TEMPERATURE
CONDUCTIVITY
OXYGEN SENSOR
TRANSMISSOMETER
SENSOR
JUNCTION
BOX
SEA WATER SAMPLING PUMP
CHEMICAL INJECTION PUMP
VIDEO SIZING LASERS
POWER AND DATA CABLING
FIBER OPTIC COMMUNICATIONS
SPARE FIBER
10 CHANNEL DIGITAL BOARD
4 CHANNEL VIDEO BOARD
APPOX. 400 LINE VIDEO BANDWIDTH
PER CHANNEL
AUDIO - DIGITAL
MODULATOR BOARD
4 CHANNELS DIGITAL 4MB/S
4 CHANNELS AUDIO 15KHZ
3 CHANNEL VIDEO BOARD
10 MHZ BANDWIDTH (750 LINES) MINIMUM
HIGH RESOLUTION
VME BUS
CONTROL COMPUTER
VB SYSTEM
400 HZ
TRANSFORMER
POWER SWITCHING
AND DISTRIBUTION
HIGH POWER AND DATA CABLING
HIGH POWER AND DATA CABLING
TOOLSLED CONNECTOR
QUICK RELEASE
MANIPULATOR ARM
JUNCTION BOX
LIGHTING
JUNCTION BOX
250 W TUNGSTEN/HALOGEN
250VDC
6
THALLIUM IODIDE/SODIUM SCANDIUM
250 W

Figure 3